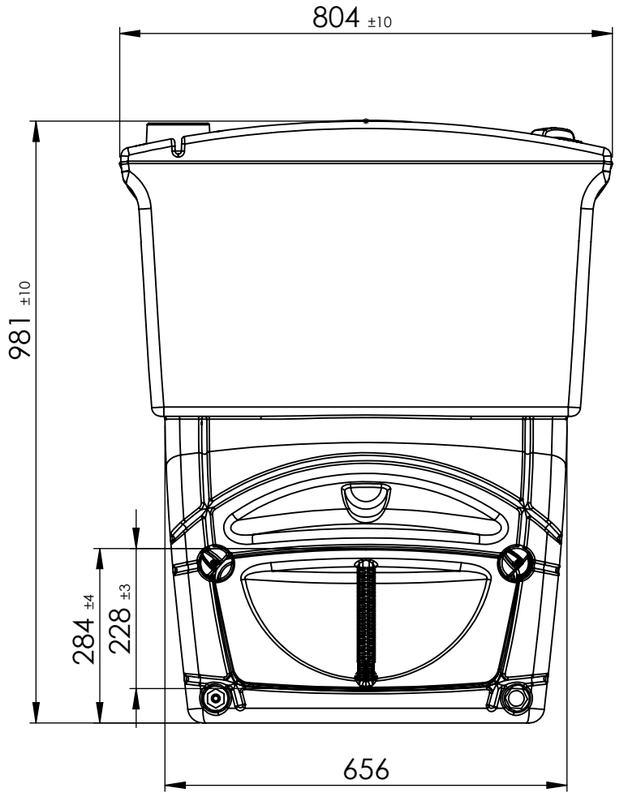
804 ±10
981 ±10
284 ±4
228 ±3
656

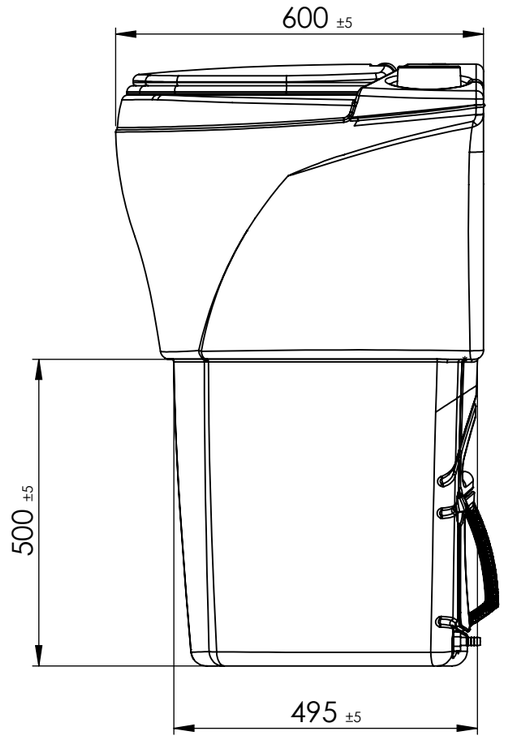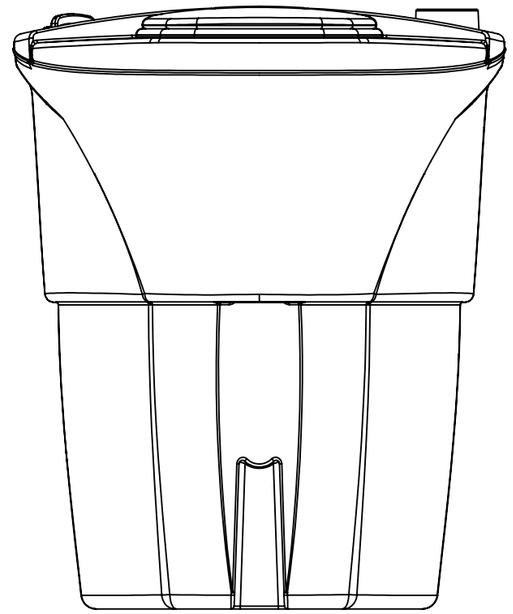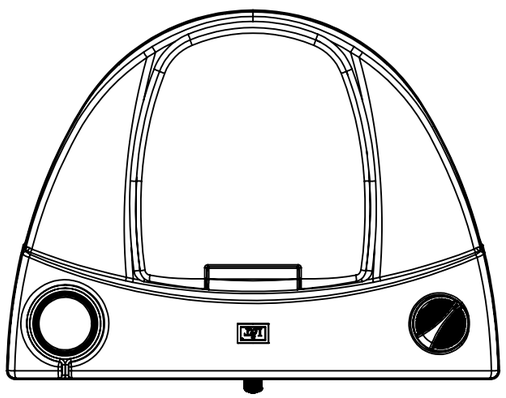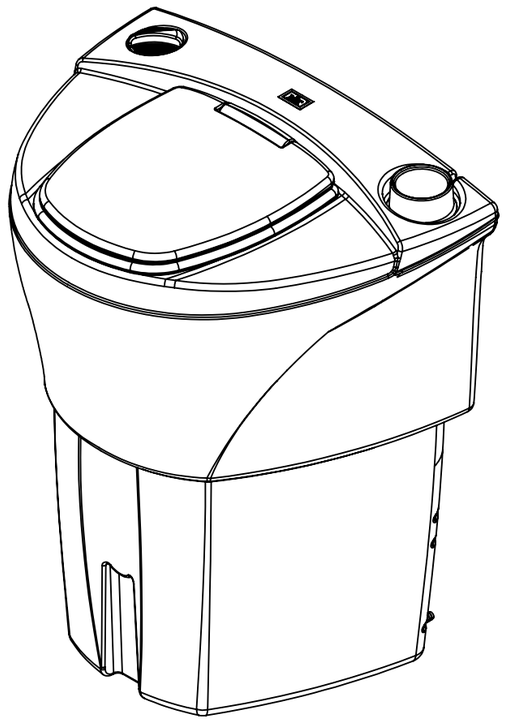
600 ±5
500 ±5
495 ±5